Shp Aug 18

Work Order ID 72432

Monday, July 25, 2011 2:37:31 PM

Item ID: D4032-041 **Accept** **Setup Start**

Revision ID: **Stop**

Item Name: Short Basket Assembly (350)

Start Date: 7/25/2011 **Start Qty:** 1.00 **Cust Item ID:**

Required Date: 8/8/2011 **Req'd Qty:** 1.00 **Customer:**

Reference:

Approvals: **Process Plan:** P **Date:** 11-07-25 **Tooling:** _____ **Date:** _____ **Run Start**

QC: _____ **Date:** _____ **SPC (Y/N):** _____ **Date:** _____ **Stop**

Sequence ID/ Work Center ID	Operation Description	Set Up/ Run Hours	Tool ID	Tool #	Plan Code	Accept Qty	Reject Qty	Reject Number	Insp. Stamp
Draw Nbr / **Revision Nbr**									
D4032 / D									
100	Pick Kit	0.00							
Packaging	**Memo**	0.00				11/8/08			
Packaging									
110	Assemble as per dwg	0.00							
HandFinish	**Memo**	0.00				11/08/09			
Hand Finishing	****Mask label plate to size of D4086 label, use scotchbrite red pad to lightly sand area for label, apply label ****								
120	QC5- Inspect part completeness to step on W/O	0.00							
QC	**Memo**	0.00							
Quality Control									

Dart Aerospace Ltd

W/O:		WORK ORDER CHANGES					
DATE	STEP	PROCEDURE CHANGE	By	Date	Qty	Approval Chief Eng / Prod Mgr	Approval QC Inspector

Part No: _____ **PAR #:** _____ **Fault Category:** _____ **NCR:** Yes No **DQA:** _____ **Date:** _____

Resolution: _____ **Disposition:** _____ **QA: N/C Closed:** _____ **Date:** _____

NCR:		WORK ORDER NON-CONFORMANCE (NCR)						
DATE	STEP	Description of NC Section A	Corrective Action Section B			Verification Section C	Approval Chief Eng	Approval QC Inspector
			Initial Chief Eng	Action Description Chief Eng	Sign & Date			

NOTE: Date & initial all entries

Work Order ID 72432

Monday, July 25, 2011 2:37:31 PM

Item ID: D4032-041 **Accept** **Setup Start** **Stop**

Revision ID:

Item Name: Short Basket Assembly (350)

Start Date: 7/25/2011 **Start Qty:** 1.00 **Cust Item ID:**

Required Date: 8/8/2011 **Req'd Qty:** 1.00 **Customer:**

Reference:

Run Start **Stop**

Approvals: **Process Plan:** _____ **Date:** _____ **Tooling:** _____ **Date:** _____

QC: _____ **Date:** _____ **SPC (Y/N):** _____ **Date:** _____

Sequence ID/ Work Center ID	Operation Description	Set Up/ Run Hours	Tool ID	Tool #	Plan Code	Accept Qty	Reject Qty	Reject Number	Insp. Stamp
130	Identify as per dwg & Stock Location:_____	0.00	PPP 72445				11/8/11		
Packaging	Memo	0.00							
Packaging									
140	QC21- Final Inspection - Work Order Release	0.00				CK 11/08/12			
QC	Memo	0.00							
Quality Control									

KL 08-24

Dart Aerospace Ltd

W/O:		WORK ORDER CHANGES					
DATE	STEP	PROCEDURE CHANGE	By	Date	Qty	Approval Chief Eng / Prod Mgr	Approval QC Inspector

Part No: _____ **PAR #:** _____ **Fault Category:** _____ **NCR:** Yes No **DQA:** _____ **Date:** _____

Resolution: _____ **Disposition:** _____ **QA: N/C Closed:** _____ **Date:** _____

NCR:		WORK ORDER NON-CONFORMANCE (NCR)						
DATE	STEP	Description of NC Section A	Corrective Action Section B			Verification Section C	Approval Chief Eng	Approval QC Inspector
			Initial Chief Eng	Action Description Chief Eng	Sign & Date			

NOTE: Date & initial all entries

Picklist Print

Monday, July 25, 2011 2:37:37 PM

Work Order ID: 72432

Parent Item: D4032-041

Parent Item Name: Short Basket Assembly (350)

Start Date: 7/25/2011 **Required Date:** 8/8/2011

Start Qty: 1.00 **Required Qty:** 1.00

Comments: IPP RevA: new issue DD 09.12.02 verified by:EC IPP Rev:B as per PA3 DD 10.03.10 verified by:EC IPP Rev:C as per RevA DD 10.03.23 verified by:EC IPP Rev:D as per dwg revC DD 10.04.20 verified by:EC IPP Rev:E as per dwg revD DD 10.08.18 verified by:EC

Component Item ID/ Item Name	Replacement Item ID	Mfg/ Purch	Bin Item	Primary Location	Last Location	Route Seq ID	Unit of Measure	Qty on Hand	Qty per Kit	Total Qty	Qty Issued	Date Issued	Status
D4086-232 Placard, Max Load		Manufactured	No			100	Each	7.0000	1	1			
				Location		**Loc Qty**		**Loc Code**					
				ST122		7							
					66274	3							
					72052	4							
D2530 Handle Weldment		Manufactured	No			100	Each	11.0000	1	1			
				Location		**Loc Qty**		**Loc Code**					
				ST506		10							
					70850	10							
				ST508		1							
					69318	1							
D2535 Spring		Manufactured	No			100	Each	103.0000	2	2			
				Location		**Loc Qty**		**Loc Code**					
				ST504		103							
					69495	3							
					71117	100							

Dart Aerospace Ltd

W/O:		WORK ORDER CHANGES					
DATE	STEP	PROCEDURE CHANGE	By	Date	Qty	Approval Chief Eng / Prod Mgr	Approval QC Inspector

Part No: _____ **PAR #:** _____ **Fault Category:** _____ **NCR:** Yes No **DQA:** _____ **Date:** _____

Resolution: _____ **Disposition:** _____ **QA: N/C Closed:** _____ **Date:** _____

NCR:		WORK ORDER NON-CONFORMANCE (NCR)						
DATE	STEP	Description of NC Section A	Corrective Action Section B			Verification Section C	Approval Chief Eng	Approval QC Inspector
			Initial Chief Eng	Action Description Chief Eng	Sign & Date			

NOTE: Date & initial all entries

H:\fFORMS\Quality Assurance\approved QA\NCRWO RevE

Picklist Print

Monday, July 25, 2011 2:37:37 PM

Work Order ID: 72432

Parent Item: D4032-041

Parent Item Name: Short Basket Assembly (350)

Start Date: 7/25/2011 **Required Date:** 8/8/2011

Start Qty: 1.00 **Required Qty:** 1.00

D2537	Manufactured	No	100	Each	49.0000	2	2	
Bushing								

Location		Loc Qty	Loc Code
ST504		49	
	69894	8	
	71853	41	

D3917-3	Manufactured	No	100	Each	21.0000	6	6	
Washer								

Location		Loc Qty	Loc Code
ST092		21	
	69513	6	
	69896	15	

D3953-3	Manufactured	No	100	Each	6.0000	2	2	
Gas Spring Stud, Lid								

Location		Loc Qty	Loc Code
ST096		6	
	69974	6	

D3953-7	Manufactured	No	100	Each	5.0000	2	2	B11885 11/8/48
Spring Spacer								

Location		Loc Qty	Loc Code
ST096		5	
	65053	4	
	69975	1	

Dart Aerospace Ltd

W/O:		WORK ORDER CHANGES					
DATE	STEP	PROCEDURE CHANGE	By	Date	Qty	Approval Chief Eng / Prod Mgr	Approval QC Inspector

Part No: _____ **PAR #:** _____ **Fault Category:** _____ **NCR:** Yes No **DQA:** _____ **Date:** _____

Resolution: _____ **Disposition:** _____ **QA: N/C Closed:** _____ **Date:** _____

NCR:		WORK ORDER NON-CONFORMANCE (NCR)						
DATE	STEP	Description of NC Section A	Corrective Action Section B			Verification Section C	Approval Chief Eng	Approval QC Inspector
			Initial Chief Eng	Action Description Chief Eng	Sign & Date			

NOTE: Date & initial all entries

H:\fFORMS\Quality Assurance\approved QA\NCRWO RevE

Picklist Print

Monday, July 25, 2011 2:37:37 PM

Work Order ID: 72432

Parent Item: D4032-041

Parent Item Name: Short Basket Assembly (350)

Start Date: 7/25/2011 **Required Date:** 8/8/2011

Start Qty: 1.00 **Required Qty:** 1.00

D3953-9	Manufactured	No	100	Each	7.0000	2	2	B71869

Gas Spring Washer

Location		Loc Qty	Loc Code
ST096		7	
	69025	5	
	69973	2	

D3953-17	Manufactured	No	100	Each	1.0000	2	2	B71870

Gas Spring Spacer

Location		Loc Qty	Loc Code
ST096		1	
	69603	1	

D3953-19	Manufactured	No	100	Each	10.0000	1	1	

Gas Spring Bracket

Location		Loc Qty	Loc Code
ST096		10	
	59213	1	
	68462	9	

D3953-21	Manufactured	No	100	Each	9.0000	1	1	11614

Gas Spring Bracket

Location		Loc Qty	Loc Code
ST096		9	
	68463	9	

Dart Aerospace Ltd

W/O:		WORK ORDER CHANGES					
DATE	STEP	PROCEDURE CHANGE	By	Date	Qty	Approval Chief Eng / Prod Mgr	Approval QC Inspector

Part No: _____ **PAR #:** _____ **Fault Category:** _____ **NCR:** Yes No **DQA:** _____ **Date:** _____

Resolution: _____ **Disposition:** _____ **QA: N/C Closed:** _____ **Date:** _____

NCR:		WORK ORDER NON-CONFORMANCE (NCR)						
DATE	STEP	Description of NC Section A	Corrective Action Section B			Verification Section C	Approval Chief Eng	Approval QC Inspector
			Initial Chief Eng	Action Description Chief Eng	Sign & Date			

NOTE: Date & initial all entries

H:\fFORMS\Quality Assurance\approved QA\NCRWO RevE

Picklist Print

Monday, July 25, 2011 2:37:37 PM

Work Order ID: 72432

Parent Item: D4032-041

Parent Item Name: Short Basket Assembly (350)

Start Date: 7/25/2011 **Required Date:** 8/8/2011

Start Qty: 1.00 **Required Qty:** 1.00

D3969-3 Spring (Basket Lid)	Manufactured	No	100	Each	10.0000	1	1	

Location	Loc Qty	Loc Code
ST272	10	
64285	1	
68925	9	

D4017-041 Short Basket Base Assembly (350)	Manufactured	No	100	Each	0.0000	1	1	B 72434 11/08/09
D4018-041 Short Basket Lid Assembly (350)	Manufactured	No	100	Each	0.0000	1	1	B 72436 11/08/09
AN3-14A Bolt	Purchased	No	100	Each	100.0000	4	4	

Location	Loc Qty	Loc Code
ST352	100	
117872	100	

AN3-16A Bolt	Purchased	No	100	Each	91.0000	2	2	11/8/09

Location	Loc Qty	Loc Code
ST352	91	
117441	91	

Dart Aerospace Ltd

W/O:		WORK ORDER CHANGES					
DATE	STEP	PROCEDURE CHANGE	By	Date	Qty	Approval Chief Eng / Prod Mgr	Approval QC Inspector

Part No: _____ **PAR #:** _____ **Fault Category:** _____ **NCR:** Yes No **DQA:** _____ **Date:** _____

Resolution: _____ **Disposition:** _____ **QA: N/C Closed:** _____ **Date:** _____

NCR:		WORK ORDER NON-CONFORMANCE (NCR)						
DATE	STEP	Description of NC Section A	Corrective Action Section B			Verification Section C	Approval Chief Eng	Approval QC Inspector
			Initial Chief Eng	Action Description Chief Eng	Sign & Date			

NOTE: Date & initial all entries

H:\fFORMS\Quality Assurance\approved QA\NCRWO RevE

Picklist Print

Monday, July 25, 2011 2:37:37 PM

Work Order ID: 72432

Parent Item: D4032-041

Parent Item Name: Short Basket Assembly (350)

Start Date: 7/25/2011 **Required Date:** 8/8/2011

Start Qty: 1.00 **Required Qty:** 1.00

AN4-12	Purchased	No	100	Each	42.0000	3	3	
Bolt								

Location	Loc Qty	Loc Code
ST357	42	
117514	42	

AN5-17A	Purchased	No	100	Each	104.0000	4		
Bolt								

Location	Loc Qty	Loc Code
ST337	50	
118422	50	
ST339	54	
117619	10	
117872	44	

AN310-4	Purchased	No	100	Each	67.0000	3		
NUT								

Location	Loc Qty	Loc Code
ST324	67	
118078	17	
118112	50	

AN310C4	Purchased	No	100	Each	42.0000	2	2	
Nut								

Location	Loc Qty	Loc Code
ST324	42	
116741	1	
117395	31	
118090	10	

Dart Aerospace Ltd

W/O:		WORK ORDER CHANGES					
DATE	STEP	PROCEDURE CHANGE	By	Date	Qty	Approval Chief Eng / Prod Mgr	Approval QC Inspector

Part No: _____ **PAR #:** _____ **Fault Category:** _____ **NCR:** Yes No **DQA:** _____ **Date:** _____

Resolution: _____ **Disposition:** _____ **QA: N/C Closed:** _____ **Date:** _____

NCR:		WORK ORDER NON-CONFORMANCE (NCR)						
DATE	STEP	Description of NC Section A	Corrective Action Section B			Verification Section C	Approval Chief Eng	Approval QC Inspector
			Initial Chief Eng	Action Description Chief Eng	Sign & Date			

NOTE: Date & initial all entries

H:\fFORMS\Quality Assurance\approved QA\NCRWO RevE

Picklist Print

Monday, July 25, 2011 2:37:38 PM

Work Order ID: 72432

Parent Item: D4032-041

Parent Item Name: Short Basket Assembly (350)

Start Date: 7/25/2011 **Required Date:** 8/8/2011

Start Qty: 1.00 **Required Qty:** 1.00

MS21042L3 Nut	Purchased	No	100	Each	1,389.000	6	6	

Location	Loc Qty	Loc Code
ST300	1389	
117441	629	
117601	400	
117885	360	

MS21042L5 Nut	Purchased	No	100	Each	1,300.000	4	4	

Location	Loc Qty	Loc Code
ST300	1300	
116105	5	
116548	111	
117441	498	
117591	100	
117611	90	
118179	496	

MS24665-151 Cotter Pin	Purchased	No	100	Each	443.0000	3	3	11/8/48

Location	Loc Qty	Loc Code
ST309	443	
17566	443	

Dart Aerospace Ltd

W/O:		WORK ORDER CHANGES					
DATE	STEP	PROCEDURE CHANGE	By	Date	Qty	Approval Chief Eng / Prod Mgr	Approval QC Inspector

Part No: _____ **PAR #:** _____ **Fault Category:** _____ **NCR:** Yes No **DQA:** _____ **Date:** _____

Resolution: _____ **Disposition:** _____ **QA: N/C Closed:** _____ **Date:** _____

NCR:		WORK ORDER NON-CONFORMANCE (NCR)						
DATE	STEP	Description of NC Section A	Corrective Action Section B			Verification Section C	Approval Chief Eng	Approval QC Inspector
			Initial Chief Eng	Action Description Chief Eng	Sign & Date			

NOTE: Date & initial all entries

H:\fFORMS\Quality Assurance\approved QA\NCRWO RevE

Picklist Print

Monday, July 25, 2011 2:37:38 PM

Work Order ID: 72432

Parent Item: D4032-041

Parent Item Name: Short Basket Assembly (350)

Start Date: 7/25/2011 **Required Date:** 8/8/2011

Start Qty: 1.00 **Required Qty:** 1.00

MS24665-300 Cotter Pin	Purchased	No	100	Each	260.0000	2	2

Location	Loc Qty	Loc Code
GA	200	
118234	200	
ST309	60	
116823	60	

NAS1149F0432P Washer	Purchased	No	100	Each	194.0000	6	6

Location	Loc Qty	Loc Code
ST275	194	
117291	8	
118179	186	

NAS1149C0432R Washer	Purchased	No	100	Each	4,826.000	2	2

Location	Loc Qty	Loc Code
ST297	4826	
116900	208	
117291	4618	

NAS1149F0332P WASHER	Purchased	No	100	Each	276.0000	8	8

Location	Loc Qty	Loc Code
ST275	276	
117735	87	
118354	186	
17317	3	

Dart Aerospace Ltd

W/O:		WORK ORDER CHANGES					
DATE	STEP	PROCEDURE CHANGE	By	Date	Qty	Approval Chief Eng / Prod Mgr	Approval QC Inspector

Part No: _____ **PAR #:** _____ **Fault Category:** _____ **NCR:** Yes No **DQA:** _____ **Date:** _____

Resolution: _____ **Disposition:** _____ **QA: N/C Closed:** _____ **Date:** _____

NCR:		WORK ORDER NON-CONFORMANCE (NCR)						
DATE	STEP	Description of NC Section A	Corrective Action Section B			Verification Section C	Approval Chief Eng	Approval QC Inspector
			Initial Chief Eng	Action Description Chief Eng	Sign & Date			

NOTE: Date & initial all entries

H:\fFORMS\Quality Assurance\approved QA\NCRWO RevE

Picklist Print

Monday, July 25, 2011 2:37:38 PM

Work Order ID: 72432

Parent Item: D4032-041

Parent Item Name: Short Basket Assembly (350)

Start Date: 7/25/2011 **Required Date:** 8/8/2011

Start Qty: 1.00 **Required Qty:** 1.00

NAS1149F0563P	Purchased	No	100	Each	204.0000	4	4	5	11/8/45

Washer

Location		Loc Qty	Loc Code
ST275		4	
	114576	4	
ST297		200	
	117735	200	

Dart Aerospace Ltd

W/O:		WORK ORDER CHANGES					
DATE	STEP	PROCEDURE CHANGE	By	Date	Qty	Approval Chief Eng / Prod Mgr	Approval QC Inspector

Part No: _____ **PAR #:** _____ **Fault Category:** _____ **NCR:** Yes No **DQA:** _____ **Date:** _____

Resolution: _____ **Disposition:** _____ **QA: N/C Closed:** _____ **Date:** _____

NCR:		WORK ORDER NON-CONFORMANCE (NCR)						
DATE	STEP	Description of NC Section A	Corrective Action Section B			Verification Section C	Approval Chief Eng	Approval QC Inspector
			Initial Chief Eng	Action Description Chief Eng	Sign & Date			

NOTE: Date & initial all entries

H:\fFORMS\Quality Assurance\approved QA\NCRWO RevE

ITEM	-041 QTY.	-043 QTY.	P/N	DESCRIPTION
	X		D4032-041	SHORT BASKET ASSY (350)
		X	D4032-043	SHORT BASKET ASSY, LIGHT LID (350)
1	1	1	D2530	HANDLE WELDMENT
2	2	2	D2535	SPRING
3	2	2	D2537	BUSHING
4	6	6	D3917-3	WASHER
5	2	2	D3953-3	GAS SPRING STUD, LID
6	2	2	D3953-7	GAS SPRING SPACER
7	2	2	D3953-9	GAS SPRING WASHER
8	2	2	D3953-17	GAS SPRING SPACER
9	1	1	D3953-19	GAS SPRING BRACKET
10	1	1	D3953-21	GAS SPRING BRACKET
11	1	1	D3969-3	SPRING
12	1	1	D4017-041	SHORT BASKET BASE ASSY (350)
13	1		D4018-041	SHORT BASKET LID ASSY (350)
14		1	D4019-041	LIGHT LID SHORT BASKET ASSY
15	4	4	AN3-14A	BOLT
16	2		AN3-16A	BOLT
17		2	AN3-20A	BOLT
18	3	3	AN4-12	BOLT (DRILLED)
19	4	2	AN5-17A	BOLT
20		2	AN5-21A	BOLT
21	3	3	AN310-4	NUT, CASTELLATED
22	2	2	AN310C4	NUT, CASTELLATED
23	6	6	MS21042L3	NUT
24	4	4	MS21042L5	NUT
25	3	3	MS24665-151	COTTER PIN
26	2	2	MS24665-300	COTTER PIN
27	6	6	NAS1149F0432P	WASHER
28	2	2	NAS1149C0432R	WASHER
29	8	8	NAS1149F0332P	WASHER
30	4	4	NAS1149F0563P	WASHER

D

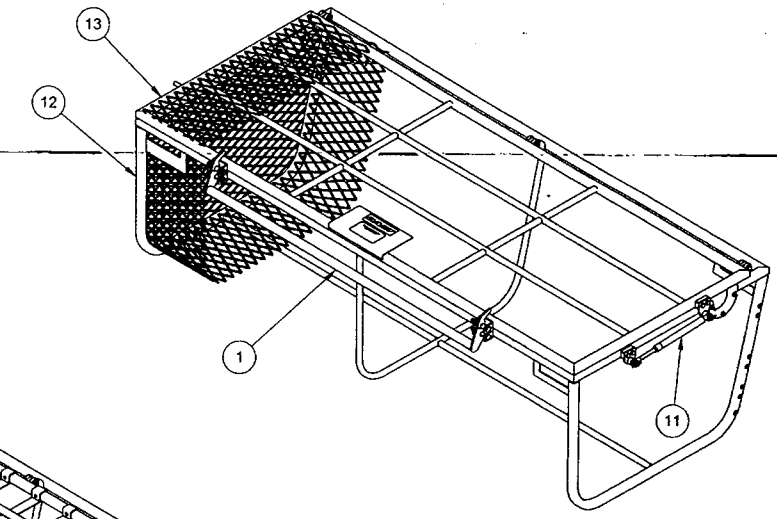

D4032-041 SHORT BASKET ASSY (350)
(MESH SHOWN LOCALLY FOR CLARITY)

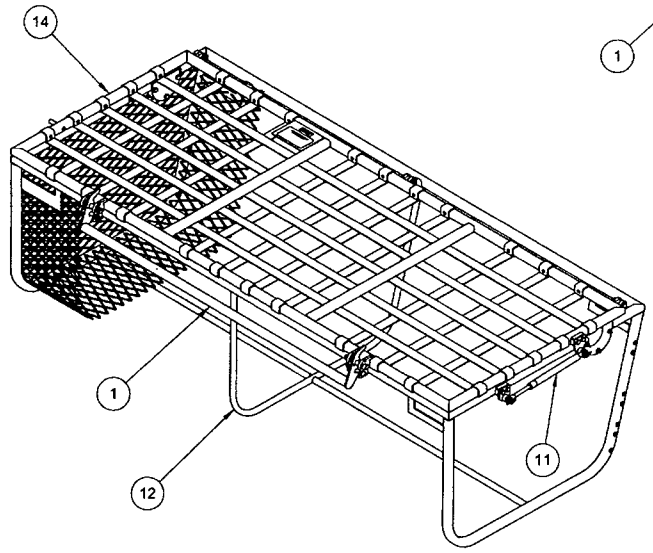

D4032-043 SHORT BASKET ASSY, LIGHT LID (350)
(MESH SHOWN LOCALLY FOR CLARITY)

SHOP COPY
RETURN TO
ENGINEERING
UNCONTROLLED COPY
SUBJECT TO AMENDMENT
WITHOUT NOTICE
WORK ORDER
NO. 72432

RELEASED
10.08.12
ECN 10-596

NOTES:
1) MATERIAL: N/A
2) FINISH: NONE
3) TOLERANCES: PER DART QSI 018 UNLESS OTHERWISE NOTED
4) UNITS: INCHES UNLESS OTHERWISE NOTED
5) BREAK SHARP EDGES: N/A
6) IDENTIFICATION: N/A
7) WEIGHT: -041: 56 lbs APPROX
-043: 45 lbs APPROX

11-07-25

REV.	DESCRIPTION	BY	DATE
D	QTY FOR ITEMS #28, #29 & #30 UNDER -043 WERE MISSING (B8-1); QTY FOR ITEM #3 WAS 4 (D6-1), ONLY 2 ARE REQUIRED, AFFECTS SECTION C-C (D3-3).	MB	10.07.23
C	AN5-21A BOLT WAS AN5-19A BOLT: BOM & (D3-3)	JPH	10.04.06
B	ITEM 15 D4086-232 & 16 D4086-243 REMOVED; ITEM RENUMBERED AS REQD. PLACARDS REMOVED (C6-2); TOP VIEW DETAIL REMOVED (C2-2)	JPH	10.03.25
A	NEW ISSUE	JPH	10.03.08

DESIGN	AJS	**DART AEROSPACE LTD** HAWKESBURY, ONTARIO, CANADA
DRAWN		
CHECKED		DRAWING NO. D4032 — REV. D — SHEET 1 OF 3
MFG. APPR.	JFS	
APPROVED		TITLE: SHORT BASKET ASSY (350) — SCALE: NTS
DE APPR.		
DATE	10.07.23	

COPYRIGHT © 2010 BY DART AEROSPACE LTD
THIS DOCUMENT IS PRIVATE AND CONFIDENTIAL AND IS SUPPLIED ON THE EXPRESS CONDITION THAT IT IS NOT TO BE USED FOR ANY PURPOSE OR COPIED OR COMMUNICATED TO ANY OTHER PERSON WITHOUT WRITTEN PERMISSION FROM DART AEROSPACE LTD.

Dart Aerospace Ltd

W/O:		WORK ORDER CHANGES					
DATE	STEP	PROCEDURE CHANGE	By	Date	Qty	Approval Chief Eng / Prod Mgr	Approval QC Inspector

Part No: _____ **PAR #:** _____ **Fault Category:** _____ **NCR:** Yes No **DQA:** _____ **Date:** _____

Resolution: _____ **Disposition:** _____ **QA: N/C Closed:** _____ **Date:** _____

NCR:		WORK ORDER NON-CONFORMANCE (NCR)						
DATE	STEP	Description of NC Section A	Corrective Action Section B			Verification Section C	Approval Chief Eng	Approval QC Inspector
			Initial Chief Eng	Action Description Chief Eng	Sign & Date			

NOTE: Date & initial all entries

H:\fFORMS\Quality Assurance\approved QA\NCRWO RevE

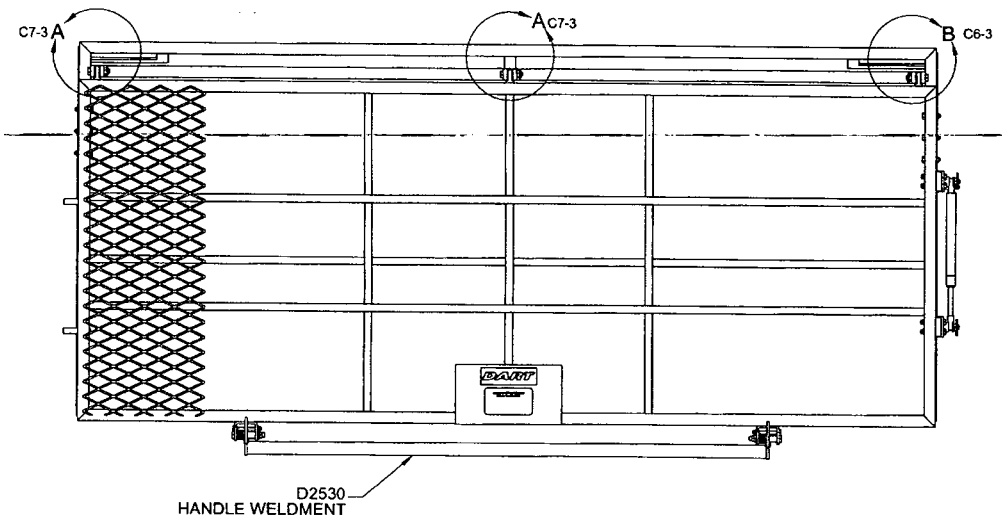

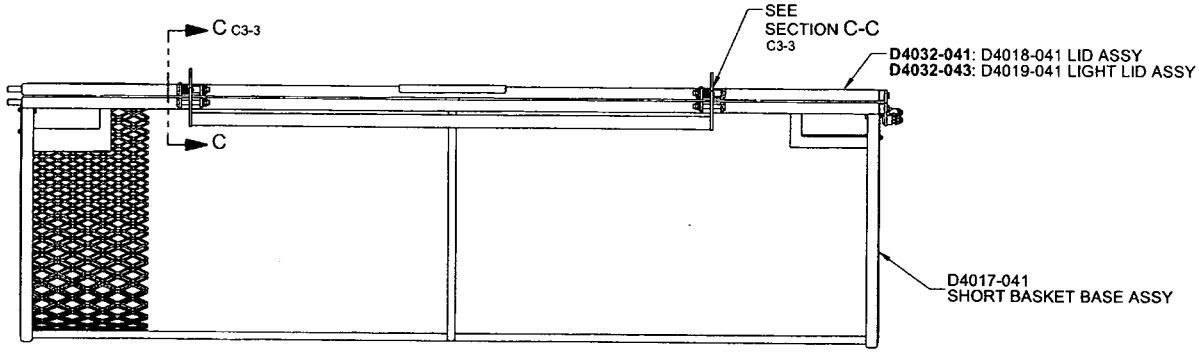

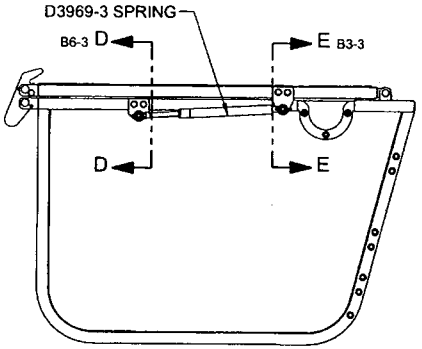

D4032-041 SHORT BASKET ASSY (350) (SHOWN)
(MESH SHOWN LOCALLY OR REMOVED FOR CLARITY)

D4032-043 SHORT BASKET ASSY, LIGHT LID (350)
(MESH SHOWN LOCALLY FOR CLARITY)

RELEASED 10.08.12 CP

12432

DESIGN	A.J.S	**DART AEROSPACE LTD** HAWKESBURY, ONTARIO, CANADA
DRAWN		
CHECKED		DRAWING NO. D4032 — REV. D — SHEET 2 OF 3
MFG. APPR.	J.F.S.	
APPROVED		TITLE SHORT BASKET ASSY (350) — SCALE NTS
DE APPR.		
DATE 10.07.23		

COPYRIGHT © 2010 BY DART AEROSPACE LTD
THIS DOCUMENT IS PRIVATE AND CONFIDENTIAL AND IS SUPPLIED ON THE EXPRESS CONDITION THAT IT IS NOT TO BE USED FOR ANY PURPOSE OR COPIED OR COMMUNICATED TO ANY OTHER PERSON WITHOUT WRITTEN PERMISSION FROM DART AEROSPACE LTD.

Dart Aerospace Ltd

W/O:		WORK ORDER CHANGES					
DATE	STEP	PROCEDURE CHANGE	By	Date	Qty	Approval Chief Eng / Prod Mgr	Approval QC Inspector

Part No: _____ **PAR #:** _____ **Fault Category:** _____ **NCR:** Yes No **DQA:** _____ **Date:** _____

Resolution: _____ **Disposition:** _____ **QA: N/C Closed:** _____ **Date:** _____

NCR:		WORK ORDER NON-CONFORMANCE (NCR)						
DATE	STEP	Description of NC Section A	Corrective Action Section B			Verification Section C	Approval Chief Eng	Approval QC Inspector
			Initial Chief Eng	Action Description Chief Eng	Sign & Date			

NOTE: Date & initial all entries

H:\fFORMS\Quality Assurance\approved QA\NCRWO RevE

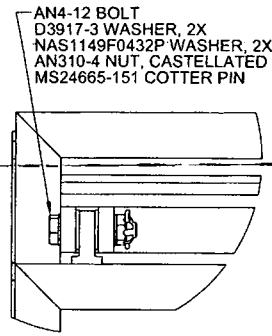

DETAIL A D8-2 D6-2

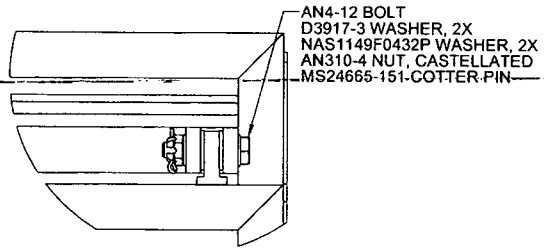

DETAIL B D4-2

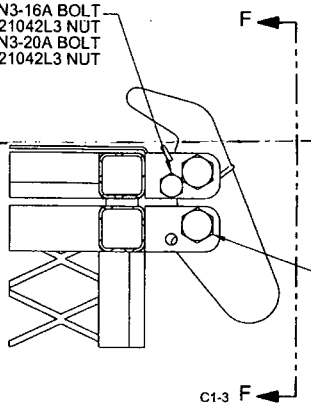

SECTION C-C B5-2 B7-2

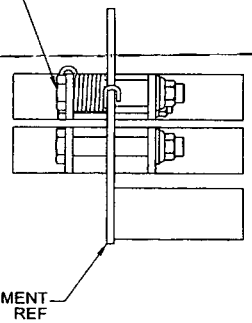

VIEW F-F C3-3

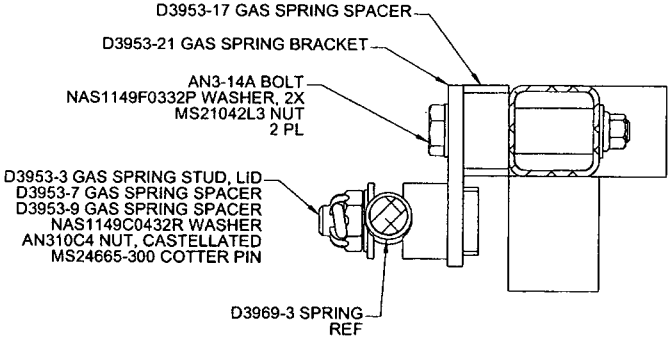

SECTION D-D B2-2

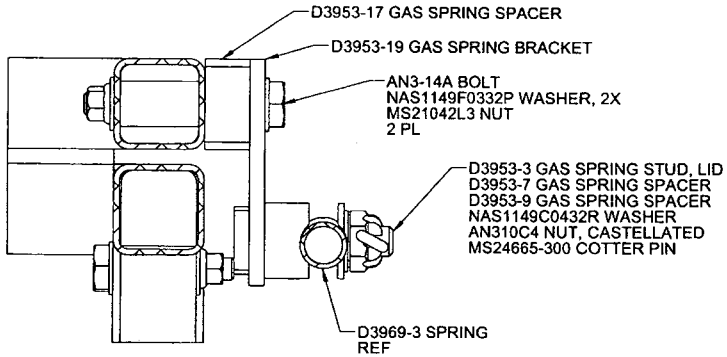

SECTION E-E B1-2

RELEASED
10.08.12

72436

DESIGN	AGS	**DART AEROSPACE LTD** HAWKESBURY, ONTARIO, CANADA
DRAWN		
CHECKED		DRAWING NO. D4032 — REV. D — SHEET 3 OF 3
MFG. APPR.		
APPROVED		TITLE — SCALE
DE APPR.		SHORT BASKET ASSY (350) — NTS
DATE	10.07.23	

COPYRIGHT © 2010 BY DART AEROSPACE LTD
THIS DOCUMENT IS PRIVATE AND CONFIDENTIAL AND IS SUPPLIED ON THE EXPRESS CONDITION THAT IT IS NOT TO BE USED FOR ANY PURPOSE OR COPIED OR COMMUNICATED TO ANY OTHER PERSON WITHOUT WRITTEN PERMISSION FROM DART AEROSPACE LTD.

Dart Aerospace Ltd

W/O:		WORK ORDER CHANGES					
DATE	STEP	PROCEDURE CHANGE	By	Date	Qty	Approval Chief Eng / Prod Mgr	Approval QC Inspector

Part No: _____ **PAR #:** _____ **Fault Category:** _____ **NCR:** Yes No **DQA:** _____ **Date:** _____

Resolution: _____ **Disposition:** _____ **QA: N/C Closed:** _____ **Date:** _____

NCR:		WORK ORDER NON-CONFORMANCE (NCR)						
DATE	STEP	Description of NC Section A	Corrective Action Section B			Verification Section C	Approval Chief Eng	Approval QC Inspector
			Initial Chief Eng	Action Description Chief Eng	Sign & Date			

NOTE: Date & initial all entries

H:\fFORMS\Quality Assurance\approved QA\NCRWO RevE